Fault-based Analysis Covering the Analog Side of a Smart or Cyber-Physical System

Nicola Dall'Ora
University of Verona
Verona, Italy
nicola.dallora@univr.it

Advisor: Franco Fummi
University of Verona
Verona, Italy
franco.fummi@univr.i

Scan me

Introduction

IEEE P2427 draft standard – Analog Defect Modelling and Coverage: [1]

- Defines the "*Defect Universe*" for analogue integrated circuits;
- Provides a definition for "*hard*" and "*parametric*" defects;
- Deals with defect injection in interconnects and primitive PDK devices;
- Assigns a probabilistic "*weight*" to defects in the coverage calculations;
- Does not specify data formats

Commercial Fault Injection Frameworks:

- Compliance to the IEEE P2427 is achieved by these frameworks with a remarkable diversity in approaches:
  - Some are more schematics oriented when building the Defect Universe;
  - Others are more netlist oriented for the same task;
  - The simulator commands used to inject faults vary.

Electrical Fault Injection

- State of practice: ISO 26262 [2]
- Fault modeling:
  - Short, open, sources, parametric
- Fault injection guidelines:
  - One fault injected at a time;
  - Only one faulty branch at a time.

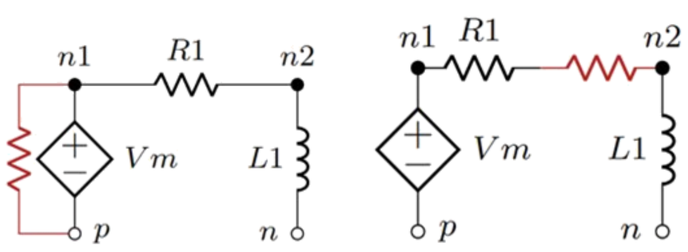

Methodology Overview

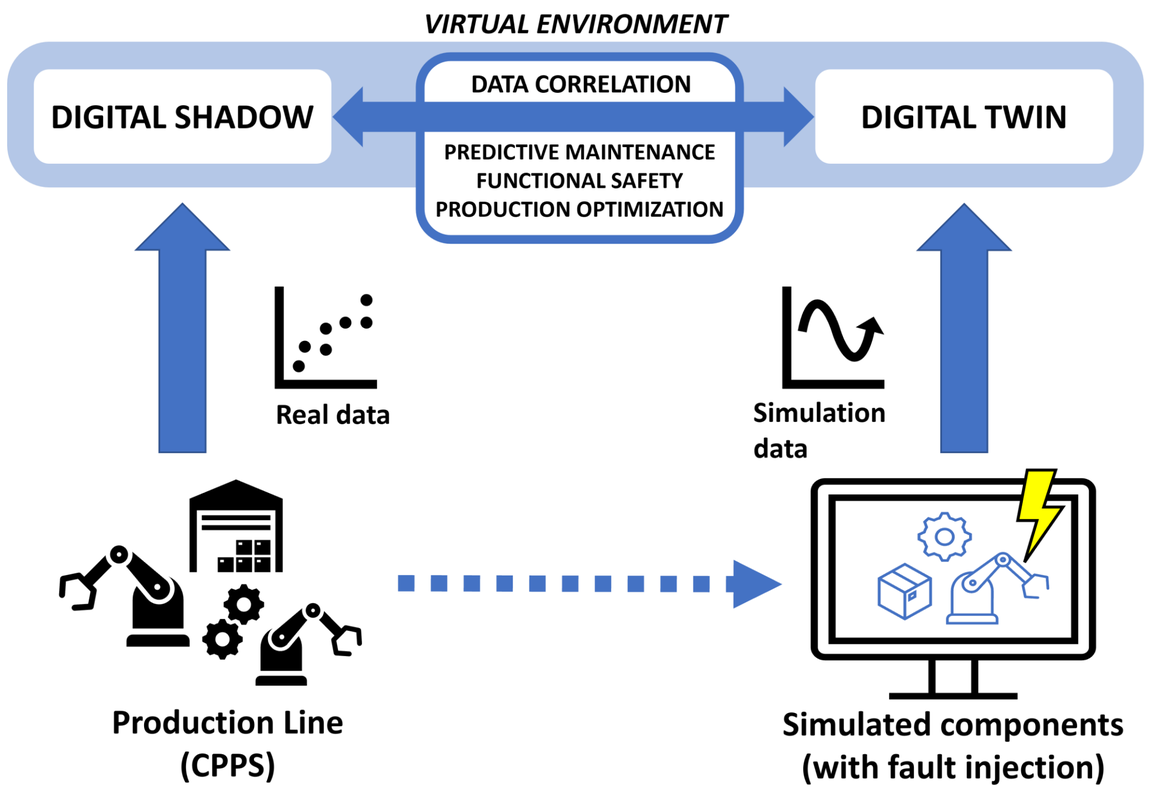

Non-electrical Fault Models for Digital Twins

Open Issues:

- ***Multi-domain*** systems: electrical/digital, mechanical and thermal
- ***Different*** fault classes and injection techniques between physical domains
- How are those several physical domains ***influencing*** each other?

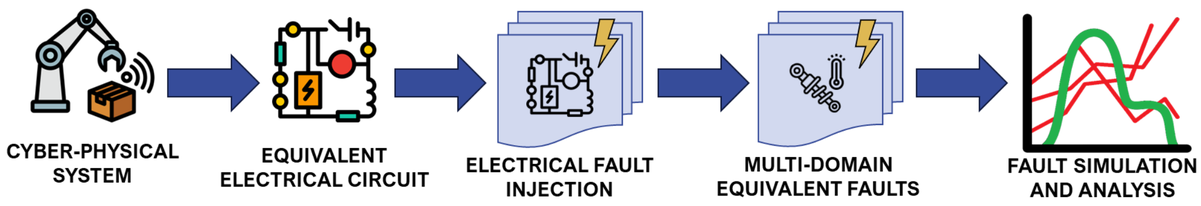

Inferred Mechanical Fault Taxonomy:

FAULT TYPE	MECHANICAL EFFECT	MECHANICAL FAULT	CORRESPONDENT FAULT LOCATION
Damper or Friction	Added/increased braking force on faulty component	Galling/Seizure, Creep, Spalling, Wear/Corrosion	**Open fault on any component**
Disconnection	The component detaches from the system	Rupture, excess of Backlash	**Short fault on resistors and capacitors**
External force	The failed component is subject to an abnormal (external) force	It can cause deformations or cracks or ruptures (from impact of fatigue)	**Voltage Source on any component**
Limited movement	The direction of motion (linear or angular) of a component is limited to one direction only	Rupture, Deformation, Wear	**Current Source on any component**
Parametric	Intrinsic characteristics of the failed component altered	Wear (component aging) and all the parameters changes	**Parameter variations in any component**

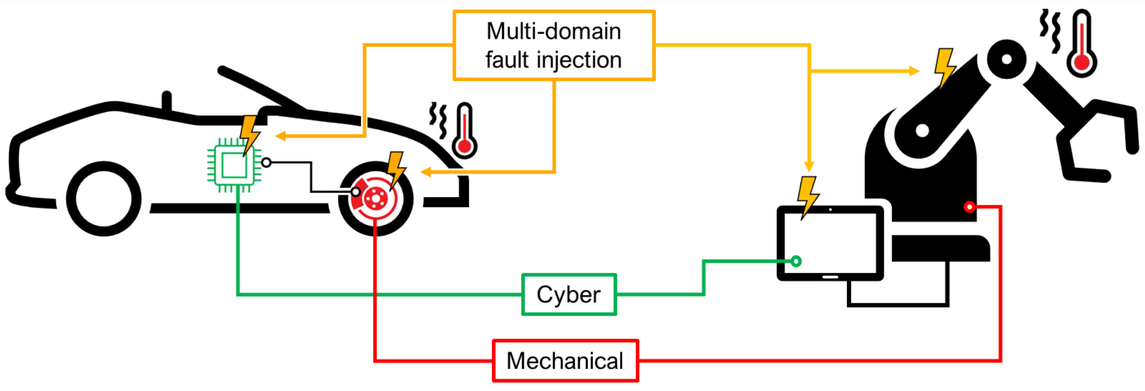

Three-Axis accelerometer example:

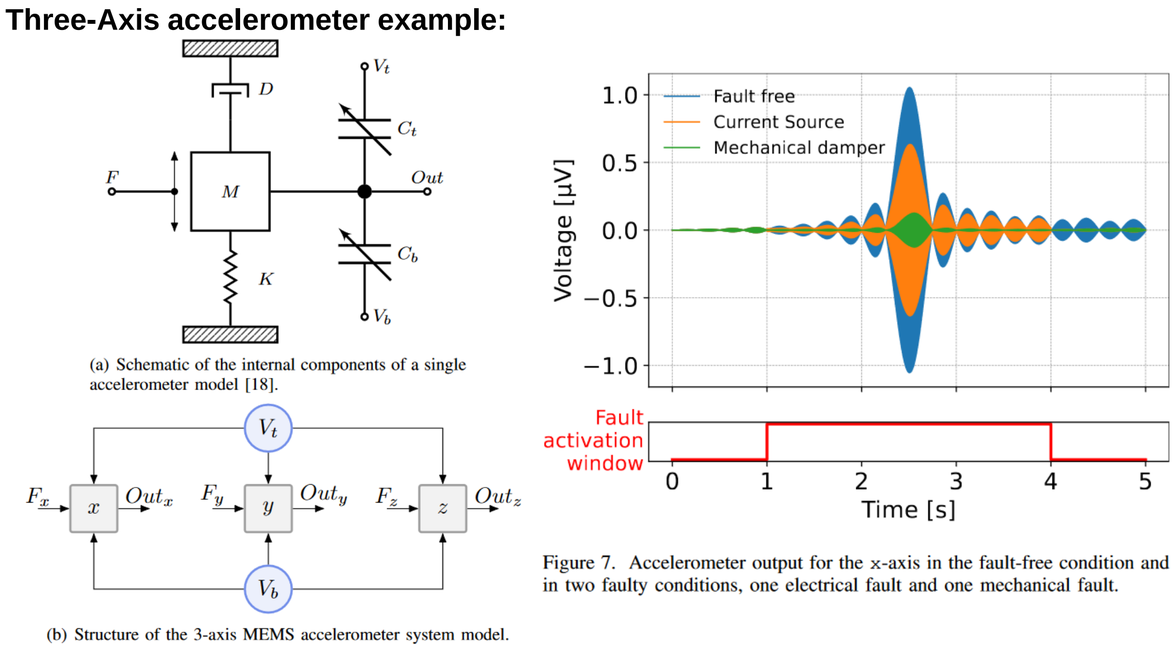

(a) Schematic of the internal components of a single accelerometer model [18].

(b) Structure of the 3-axis MEMS accelerometer system model.

Figure 7. Accelerometer output for the x-axis in the fault-free condition and in two faulty conditions, one electrical fault and one mechanical fault.

Analog Defect Injection, Simulation, and Analysis

EDACurry Framework capabilities[3]**:**

- Checking correctness of subcircuits internal components, *e.g.*, check if each component has a master defined;
- Renaming all the elements that compose a netlist, *e.g.*, components;
- Wrapping a subcircuit inside another one, *e.g.*, when extending a component or its interface;
- Instrumentation of a netlist to apply the generic template defect models;
- Print a netlist as an XML or JSON file;
- Visualize a netlist as a tree.

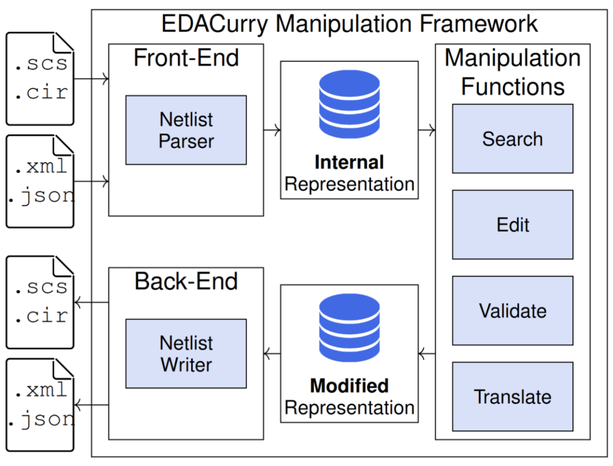

Defect examples[7]**:**

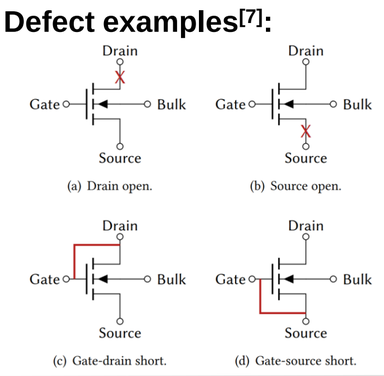

(a) Drain open. (b) Source open. (c) Gate-drain short. (d) Gate-source short.

OPAMP1 testcase (extracted from IEEE P2427 material)

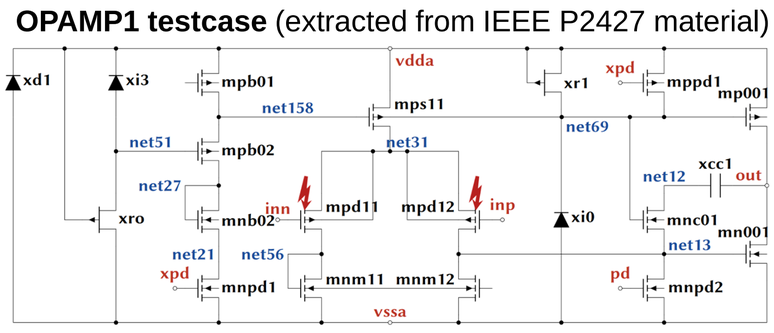

OPAMP1 output waveforms - defects injected on mpd11 MOS components:

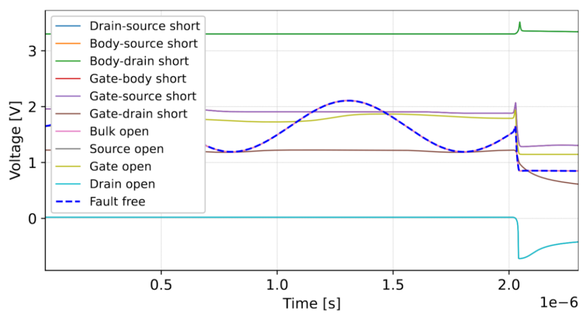

Advantages of the Verilog-A defect template implementation[4,5,6]**:**

- Portability of the defect template across Verilog-A compliant simulators;
- Readability of the defect template (no new syntax);
- Possibilities for intelligent "productivity" extensions (*e.g.*, activation checks);
- Defect templates can be used to inject in a systematic way defects in an analog circuits through EDACurry.

References

[1] IEEE Draft Standard for Analog Defect Modeling and Coverage, IEEE P2427/D0.35, March 2022, pp. 1-93.
[2] ISO 26262 -- Road vehicles -- Functional safety, 2011.
[3] N. Dall'Ora, S. Azam, E. Fraccaroli, A. Alberts and F. Fummi, "A Common Manipulation Framework for Transistor-Level Languages," *2021 Forum on specification & Design Languages (FDL)*, Antibes, France, 2021, pp. 01-07.
[4] S. Azam, N. Dall'Ora, E. Fraccaroli, A. Alberts, R. Gillon and F. Fummi, "Investigation on Realistic Stuck-on/off Defects to Complement IEEE P2427 Draft Standard," *2022 23rd International Symposium on Quality Electronic Design (ISQED)*, Santa Clara, CA, USA, 2022, pp. 51-57.
[5] N. Dall'Ora, S. Azam, E. Fraccaroli, A. Alberts and F. Fummi, "Predictive Fault Grouping based on Faulty AC Matrices," *2021 24th International Symposium on Design and Diagnostics of Electronic Circuits & Systems (DDECS)*, Vienna, Austria, 2021, pp. 11-16.
[6] N. Dall'Ora, et al. "Verilog-A Implementation of Generic Defect Templates for Analog Fault Injection." *Proceedings of the Great Lakes Symposium on VLSI 2023*. 2023.
[7] S. Azam, N. Dall'Ora, et al. Analog Defect Injection and Fault Simulation Techniques: A Systematic Literature Review. *IEEE Transactions on Computer-Aided Design of Integrated Circuits and Systems*.
[8] N. Dall'Ora, et. al. "Inferring mechanical fault models from the electrical domain". In *2022 IEEE 5th International Conference on Industrial Cyber-Physical Systems (ICPS)* (pp. 01-08). IEEE.
[9] F. Tosoni, N. Dall'Ora, et. al. "A framework for modeling and concurrently simulating mechanical and electrical faults in verilog-ams". In *2022 Forum on Specification & Design Languages (FDL)* (pp. 1-8). IEEE.
[10] F. Tosoni, N. Dall'Ora, et. al. "Thermal digital twin of a multi-domain system for discovering mechanical faulty behaviors". In *2023 IEEE 21st International Conference on Industrial Informatics (INDIN)* (pp. 1-8). IEEE.
[11] F. Tosoni, N. Dall'Ora, et. al. "Multi-Domain Fault Models Covering the Analog Side of a Smart or Cyber-Physical System". *IEEE Transactions on Computers*.