Adaptive Learning Based Building Load Prediction for Microgrid Economic Dispatch

Rumia Masburah[1], Rajib Lochan Jana[1], Ainuddin Khan[1], Shichao Xu[2], Shuyue Lan[2], Soumyajit Dey[1], and Qi Zhu[2]
[1]*Indian Institute of Technology Kharagpur*, [2]*Northwestern University*
{rumiamasburah, rajib.jana, ainuddin}@iitkgp.ac.in, soumya@cse.iitkgp.ac.in
{shichaoxu2023, slan,}@u.northwestern.edu, qzhu@northwestern.edu

***Abstract*—Given that building loads consume roughly 40% of the energy produced in developed countries, smart buildings with local renewable resources offer a viable alternative towards achieving a greener future. Building temperature control strategies typically employ detailed physical models which require a significant amount of time, information and finesse. Even then, due to unknown building parameters and related inaccuracies, future power demands by the building loads are difficult to estimate. This creates unique challenges in the domain of microgrid economic power dispatch for satisfying building power demands through efficient control and scheduling of renewable and non-renewable local resources in conjunction with supply from the main grid. In this work, we estimate the real-time uncertainties in building loads using Gaussian Process (GP) learning and establish the effectiveness of run time model correction in the context of microgrid economic dispatch.**

***Index Terms*—Gaussian Process Learning, Deep Reinforcement Learning, Predictive Control, Economic Dispatch, Building thermal model.**

I. Introduction

Given the significant energy requirement (about 40%) of building loads in developed countries, microgrids have evolved as an alternative low carbon footprint power generation alternative. In large smart buildings, the heating, ventilation, and air conditioning (HVAC) systems consume around 70% of the total power. Hence, it is important to develop microgrid economic dispatch techniques which take accurate demand prediction of building HVAC loads into account. The accuracy of HVAC load prediction increases with the accuracy of building thermal models, which again vary due to incorrect measurements of thermal parameters (conductivity of the building material, convection of air etc.). Also, developing accurate thermal model from scratch is a time consuming and costly process [4]. As an alternative, machine learning based methods have emerged for capturing occupancy and weather sensitive building thermal behaviour [4]. However, the accuracy of the machine learning model depends on the quality of data available to train the model before being actually deployed.

In this work, we consider a hybrid approach, where we use supervised machine learning technique for modeling the *error* in the initial thermal model w.r.t. prediction of HVAC power consumption We model the error between the observed and predicted building HVAC power consumption using a Gaussian Process (GP) learning scheme. Our choice of GP as the error correction model is motivated by the fact that GPs can capture complex behavior with fewer parameters and high flexibility. This is an important feature from a new building perspective for which sufficient quality data is not available. In an online setting, where the building HVAC operates and generates actual power demands, our technique accumulates the error data in order to update the GP model on-the-fly for increasing the accuracy of the model.

Since the learning of the GP incurs significant computation and potentially communication cost when deploying in large building networks, we need to judiciously select the training update instances. For this we employ a Deep Reinforcement Learning (DRL)-based supervisor that adaptively triggers GP learning and model update phases for consistently providing accurate power demand prediction of the building, with the view of minimizing the cumulative utilization of computing resources for the training of GP model. The dynamically error corrected model provides power demand estimates which are used by a Model Predictive Control (MPC) strategy that computes economic dispatch inputs for the building microgrid. The MPC can either compute a day-ahead power dispatch schedule in open loop; or solve an hourly rolling optimization problem, considering real-time uncertainties such as weather patterns, distributed energy resources (DER) status and load demand prediction. Using this methodology, it is expected that over time the error between the predicted and observed power demands decrease. Imprecise building thermal models based on Gaussian Processes (GP) have been considered for demand response (DR) applications in [4]. Unlike some existing works [10], we design an MPC-based economic dispatch scheme with DERs, which is building load sensitive. In retrospect, our work proposes the following novel contributions.

- We propose the first approach for thermal load aware intelligent microgrid power dispatch.
- For modeling building thermal loads, we employ a novel learning architecture that performs GP based incremental refinement of approximate building thermal models.
- We design a DRL-based supervisory controller which decides GP training update timings with the view of minimizing the cumulative bandwidth of computing resources for the training of GP model.

II. System Modeling

Load Demand and Building Thermal Dynamics: The overall load demand of a building is estimated as the summation of the HVAC power demand and suitable terms representing other electrical loads such as lighting. The major part of the power demand for HVAC is from its Variable Speed Driven (VSD)

The work was funded by MHRD and Department of Power, Govt. of India, under the IMPRINT project no. 6158.

supply fan and chiller. We estimate the power demand of the fan at sampling instant k using the quadratic fan power model, given by $P_f(k) = k_f(\dot{m}(k))^2$, where k_f is a parameter that captures both the fan efficiency and the duct pressure losses while $\dot{m}(k)$ is the supply air mass flow rate of the fan [6]. The chiller power demand is estimated by $P_c(k) = \frac{c_p}{\eta}\dot{m}(k)(T_s - T_c)$, where η is a coefficient of performance for chiller, c_p is the specific heat capacity of air, and T_s, T_c are the temperature of air in and out of the chiller respectively [6]. The overall power demand of the HVAC system, $P_H(k)$, is estimated as:

$$P_H(k) = P_f(k)+P_c(k) = k_f(\dot{m}(k))^2+\frac{c_p}{\eta}\dot{m}(k)(T_s-T_c) \quad (1)$$

The resistance-capacitance based modeling of building thermal dynamics is adapted from [8], generated automatically by [6].

Modeling the Error in Demand Prediction: We augment the building model with additive dynamical terms describing the error in state prediction to improve the accuracy of building model, like [2], as follows.

$$x_B(k+1) = A_B x_B(k) + B_B u_B(k) + E_B d_B(k) + g(x_B(k), u_B(k), d_B(k)) \quad (2)$$

where $d_B(k)$ is the disturbance vector comprising external weather related parameters like wind speed, direction, solar radiation etc. A_B, B_B, E_B represent the state. Here, g represents the error in state prediction. For modelling the function g, we consider Gaussian Process [4] technique. In Gaussian Process Regression, the output q w.r.t. an input r is represented as $q = f(r)$, where $f : \mathbb{R}^n \to \mathbb{R}$.

The GP corresponding to q can be fully specified by the mean function $\mu(r)$, covariance function $s(r, r')$ and variance σ^2. Given a possible (state, input, disturbance)-triple we compute the state prediction error $\Delta x_B(k)$ i.e. the difference between the observed $(x'_B(k+1))$ and the predicted $(x_B(k+1))$ as, $\Delta x_B(k) = g(x_B(k), u_B(k), d_B(k))$. With $i(k) = [x_B^T(k), u_B^T(k), d_B^T(k)]^T$, we use a training data set $D_B = [[i(k), \cdots, i(k+N)]^T, [\Delta x_B(k), \cdots, \Delta x_B(k+N)]^T]$ to train a GP model for $\Delta x_B(k)$. The control law of the HVAC system determines the control input (air mass flow rate $\dot{m}(k)$) at time k considering the augmented building thermal model of Eq. (2). For the control input $\dot{m}(k)$, the approximate power demand $P_H(k)$ of the HVAC in period $[k, k+1]$ is predicted using Eq. (1). In order to refine the load demand prediction model for P_H, we model a GP, $\Delta P_H \sim \mathcal{N}(\overline{\Delta P_H}, \sigma^2_{\Delta P_H})$ capturing the error in P_H. Thus, the overall load demand with GP adjustment is $P_H^{Total} = P_H + \Delta P_H$. This GP is trained using a dataset of predicted power demand and error in prediction of power demands.[1]

Microgrid System Model: We consider a microgrid architecture comprising diesel generators (DGs) as nonrenewable energy source, photovoltaic (PV) systems as renewable sources and battery bank as the storage system. In the microgrid, the power generation of the PV source at some k-th instant can be modeled as $P_{solar}(k) = A * sr * h(k) * PR$, where A is the total solar panel area, sr is the solar panel yield (%), $h(k)$ is the solar radiation, and PR is the performance ratio [10]. For the storage system, i.e., the battery, the charging/discharging dynamics is governed by $\dot{E}_{ss}(k) = -\delta_{ss}E_{ss}(k) - \frac{P_{ss}(k)}{\eta_{\sigma(k)}E_{ss}^{max}}$, where $E_{ss}(k), P_{ss}(k)$ are the current state of charge (SOC) of the battery and the power supply from the battery respectively. Also δ_{ss} is the self-discharge rate of storage, $\eta_{\sigma(k)}$ represents discharging/charging efficiency based on the switching signal $\sigma(k) = 0/1$. E_{ss}^{max} is the maximum storage capacity. The storage system power dynamics is modeled using the first-order lag dynamic equation $\dot{P}_{ss}(k) = -\frac{1}{\tau_{ss}}P_{ss}(k)+\frac{U_{ss}(k)}{\tau_{ss}}$, following [9], where τ_{ss} is the average delay incurred between power command and delivery. Here, $U_{ss}(k) = \{U_{ch}(k), U_{dis}(k)\}$ is the command to the battery by the supervisory controller. We have $U_{ss}(k) = U_{dis}(k)$ when $\sigma(k) = 0$, i.e. discharging and $U_{ss}(k) = U_{ch}(k)$ otherwise. The power generation dynamics of the diesel generator can be given as $\dot{P}_d(k) = -\frac{1}{\tau_d}P_d(k) + \frac{U_d(k)}{\tau_d}$, where τ_d is the average delay incurred between power command and delivery and $U_d(k)$ is the power commanded to the diesel generator by the supervisory controller [9]. Using these equations, the discrete time power generation dynamics of the microgrid can be written as:

$$x_M(k+1) = A_M x_M(k) + B_M u_M(k) + E_M d_M(k) \quad (3)$$
$$y_M(k+1) = C_M x_M(k+1)$$

where A_M, B_M, C_M and E_M are state, input, output and disturbance matrices respectively. The state $x_M(k)$, control input $u_M(k)$, output $y_M(k)$ and disturbance $d_M(k)$ vectors are defined as $x_M(k) = [E_{ss}(k)\, P_{ss}(k)\, P_d(k)\, P_{solar}(k)]^T$, $u_M(k) = [U_{ss}(k)\, U_d(k)]^T$, $y_M(k) = [P_{ss}(k)\, P_d(k)\, P_{solar}(k)]^T$, $d_M(k) = [D_{E_{ss}}(k)\, D_{P_{ss}}(k)\, D_{P_d}(k)\, h(k)]^T$, where $D_{E_{ss}}(k)$, $D_{P_{ss}}(k)$, $D_{P_d}(k)$ represent the model disturbances in respective state variables.

III. Online adaptive-Learning Framework

We provide an overview of our refinement-in-the-loop methodology in Fig. 1. We simulate the actual grid deployment scenario as follows. For representing actual buildings (with unknown thermal dynamics), we consider calibrated Energyplus [3] based building thermal models.

Microgrid Economic Dispatch: In this work we perform microgrid control using a Model Predictive Control (MPC) scheme which generates as control signals the setpoints for local controllers to regulate working of the DG, PV and battery subsystems. The operational limits of these DERs can be represented by bounds on state variables as:
$C_1 : \mathcal{X}^{min} \leq x(k) \leq \mathcal{X}^{max}$, where vectors $\mathcal{X}^{min}$ and $\mathcal{X}^{max}$ contain the minimum and maximum allowed values of the microgrid state variables. The power command to the diesel generator $U_d(k)$ is bounded by the minimum P_d^{min} and maximum P_d^{max} power capacity of the diesel generator given as $C_2 : P_d^{min} \leq U_d(k) \leq P_d^{max}$. In every k-th sampling interval, we are provided with predicted building load and GP approximation of error in demand prediction, so that the augmented demand is, $P_H^{Total}(k) = P_H(k) + \Delta P_H \sim \mathcal{N}(\overline{\Delta P_H}, \sigma^2_{\Delta P_H})$. Since the power demand prediction exhibits uncertainty due to inaccurate GP model, we require some confidence value ϵ such that for k-th sampling period we can maintain a guarantee that $\mathbb{P}(P_{min}(k) \leq P_H^{Total}(k) \leq P_{max}(k)) \geq 1 - \epsilon$. Following the Lemma 16 in [4], we can conservatively approximate such

[1]Note that the GP on building state contributes to the overall error correction in power consumption estimation using the GP of ΔP_H.

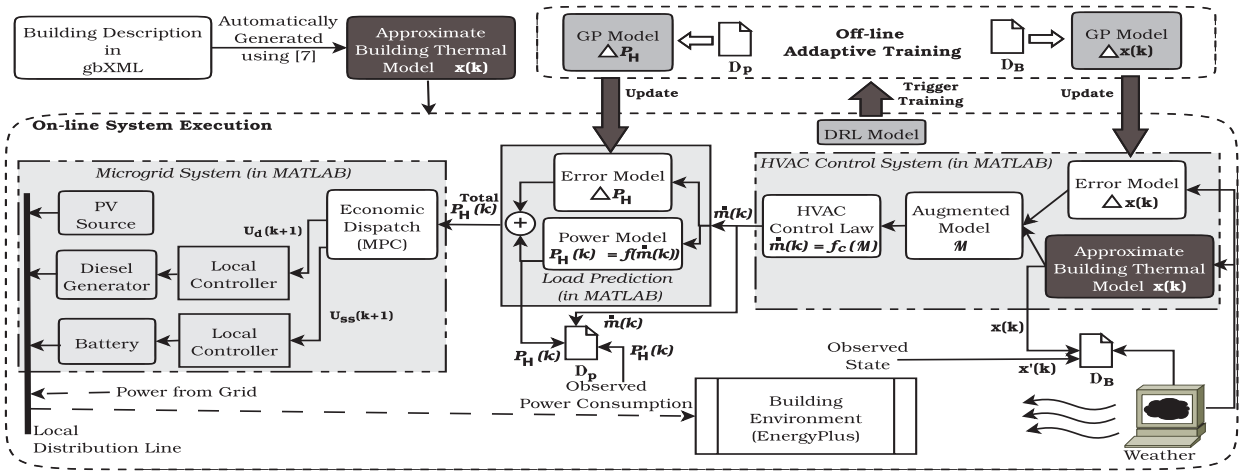

Fig. 1: Architecture of our Adaptive Learning CAD Framework

chance constraints as:

$$\gamma \geq \sigma_{\Delta P_H},\ P_{min}(k) - P_{max}(k) \leq 2\Phi^{-1}(\epsilon^*/2)\gamma \quad (4)$$

$$P_{min}(k) - \overline{\Delta P_H} \leq \Phi^{-1}(\epsilon)\gamma,\ \overline{\Delta P_H} - P_{max}(k) \leq \Phi^{-1}(\epsilon)\gamma$$

where ϵ must lie inside the interval $(0, \frac{1}{2}]$. Φ^{-1} is the inverse cumulative distribution function of standard Gaussian distribution, γ is an auxiliary variable, and $\epsilon^* = \epsilon/1.25$. In order to satisfy the predicted power demand, we add the constraint, $C_3 : P_{max}(k) \leq P_{ss}(k) + P_d(k) + P_{solar}(k) + P_g(k)$. The objective of the MPC-based control scheme for the dynamical system in Eq. (3) is to satisfy the estimated power demand of the building network using the microgrid and the utility grid, while minimizing the overall electricity cost along with microgrid operation and maintenance cost. The overall cost $J(k, k+\lambda)$ for some interval $[k, k+\lambda]$ can be written as: $J(k, k+\lambda) = \sum_{n=k}^{k+\lambda}[C_m^T(n)y_m(n) + C_g(n)P_g(n)]$ where vector $C_m(k)$ represents the generation/operational cost per unit from battery, diesel generator and PV source. Also, $C_g(k)$ is the grid power cost/unit. $P_g(k)$ is the power drawn from utility grid within interval $[k, k+1]$. The overall MPC formulation for the microgrid thus becomes: $min_{u_M(k),\cdots,u_M(k+\lambda)} J(k, k+\lambda)$ subject to Eq. (3), Eq. (4), $C_1, C_2,$ and C_3.

DRL based Adaptive GP Learning: The GP models for both building thermal model error and power demand error (i.e. $\Delta x_B, \Delta P_H$) require online training while the predictive power dispatch loop continues operating. This can be performed in cloud/local resources (refer Fig. 1) whenever the prediction errors cross acceptable limits. However, this decision needs to be judicious since local errors at certain time-steps should not unnecessarily trigger the costly training phase. For learning suitable model update timings from experience while maintaining a balance between communication/computational cost and prediction accuracy, we employ a DRL based supervisor.

We formulate this sequential decision process as a Markov Decision process (MDP) and apply deep Q-learning [7]. The action of triggering the learning process is determined by the current system state $S_k = \langle i(k), P_H(k), k\rangle$ with notations defined earlier. We consider the Boolean action space as $A = \{a_{on} = 0, 1\}$ denoting whether the currently employed GP shall switch to training or not. For an action in the k-th time step, the reward is defined as, $r(k) = w_{acc} \cdot acc(k) - w_{cost} \cdot train\_cost(k)$, where $acc(k)$ is the observed accuracy of the GP model and $train\_cost(k)$ is the cost of a training run with currently accumulated data. Here, acc denotes the Mean Absolute Percentage Error (MAPE) for the prediction accuracy of the GP regression method for some κ samples, i.e., $\frac{1}{\kappa}\sum_{j=1}^{\kappa}|\frac{\Delta P_H(k-\kappa+j)}{P_H(k-\kappa+j)}|$. Here, w_{acc} and w_{cost} are the scaling factors associated with the accuracy and training cost of the GP model.

IV. Experimental Setup and Result

We implement the control and learning framework described in Section-III and use two calibrated building model benchmarks available in EnergyPlus [3], an academic building and an office building [5] for validation purpose. In our experiments, we consider these models as blackboxes with unknown thermal dynamics and we generate approximate building thermal models of the benchmark buildings using the tool provided in [6]. These models are augmented with the GP based error models with microgrid component parameters considered as given in Table I. We consider the squared exponential as a covariance

Parameter name	Value	Parameter name	Value
δ_{ss}	0.04%/hr	η	0.9
(τ_{ss}, τ_d)	(0.1,0.3) sec	$[E_{ss}^{min}, E_{ss}^{max}]$	[400, 800] KWh
$[P_{ss}^{min}, P_{ss}^{max}]$	[-200, 200] KW	$[P_d^{min}, P_d^{max}]$	[0, 150] KW

TABLE I: Microgrid Parameter Values

function [1] for our GP models. We perform an initial model validation and feature selection phase using eight weeks of synthetic data generated from EnergyPlus. We design a deep Q network for our DRL system with fully connected (FC) layers, similar to [7]. Mean square error is applied as the loss function to measure the Q-network output and the target Q-value [7]. We use the Adam optimizer [11] for updating the parameters in Q-network [7].

Simulation with online system deployment: For establishing the usefulness of using GP, we compare its performance with a Neural Network (NN) based model for our system. We deploy

our MATLAB and EnergyPlus based co-simulation framework with the weather data scenario of Kolkata given in [3] for a specific year (1986, designated as **year1**) for 100 days starting from January 1, using both GP and NN models separately. For the first week, we do not train the error models, and the approximate thermal model is used to predict building power requirement. The GP models are trained on January 8-th using the generated dataset leading to reduction in prediction error as shown in Fig. 2. We consider $\epsilon = 0.05$, $\lambda = 8$, and sampling window size of 15 minutes in the microgrid MPC for all experiments in this paper. We calculate the Mean Absolute Percentage Error (MAPE) in power prediction over a rolling window of 4 hours using a fixed-threshold method. In this method, the MAPE value is checked in every sampling window; and whenever the value crosses a threshold (here, 145 W), the error models get updated.

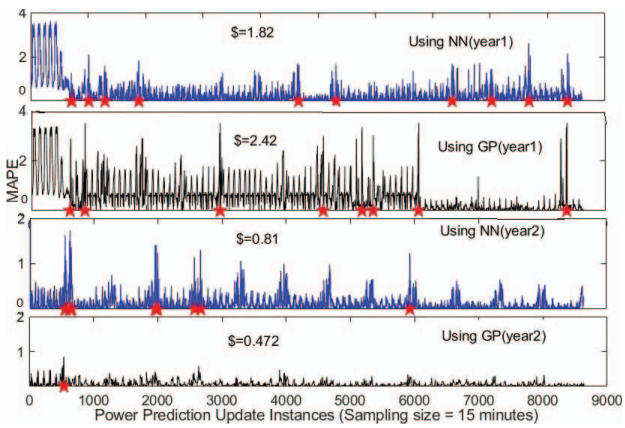

Fig. 2: MAPE in our Adaptive Framework (Fixed-Threshold method). '$' : average % load demand prediction error.

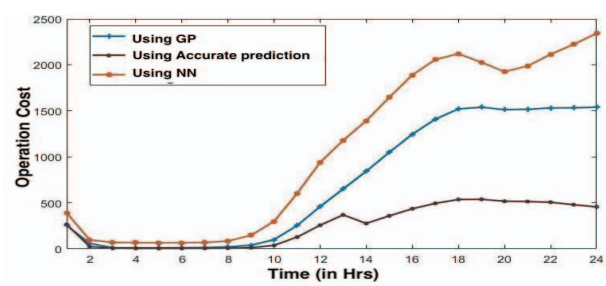

Fig. 3: Comparison of operational cost for building load.

The model update points are marked using red stars in Fig. 2. For the NN model, we employ a NN with four hidden layers. The choice of NN training algorithm is Bayesian Regularization (useful in small data scenario). We deploy the model iteratively trained in **year1** for use in **year2** (1990, **year2**) given in [3] during the same period of the year (100 days include 9600 samples, from January 1st). We observe that both errors and number of update points reduce significantly for both models in **year2**. For the last 40 days in **year1** and whole period of **year2**, GP reports much smaller MAPE than NN. We provide the operational cost (in INR) for both approaches along with the case of perfect prediction in Fig. 3. for every one-hour period, averaged for the last 30 days.

DRL based model update: We employ the DRL framework for deciding the GP model update timings and compare the performance with the fixed-threshold based method.

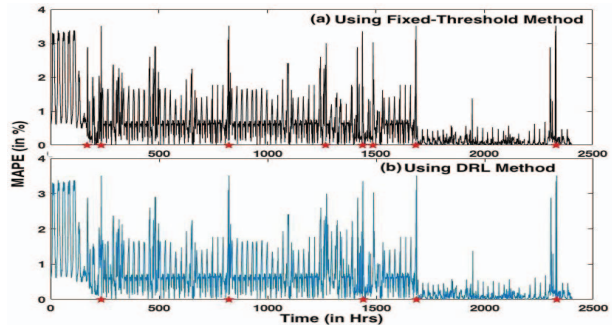

Fig. 4: Model updates comparison

In Fig. 4(a), we reproduce the previous graph of GP based refinement with fixed threshold of Fig. 2 and compare it with the error graph generated considering DRL directed GP model updates as depicted in Fig. 4(b). Both cases represent simulation of 100 days with year1 data. Though the accuracy (measured in MAPE) in both the methods are almost comparable, the average CPU utilization reduces by 23.96% and average memory usage reduces by 25.95% in the later case due to successful elimination of unnecessary model updates by the DRL.

V. Conclusion

We demonstrate the effectiveness of our additive GP models in the context of MPC-based microgrid control of building networks. Possible future work includes performing validation of the framework over large-sized buildings and weather data of multiple geographical locations.

References

[1] C. E. Rasmussen and C. K. Williams, "Gaussian processes for machine learning", volume 1. MIT press, 2006

[2] L. Hewing, J. Kabzan and M. Zeilinger, "Cautious model predictive control using gaussian process regression", IEEE Trans.on Contr. Sys., pp 1-8, 2019

[3] D. B. Crawley, C. O. Pedersen, L. K. Lawrie and F. C. Winkelmann, "EnergyPlus: Energy simulation program", ASHRAE Journal, vol. 42, pp 49-56, 2000

[4] A. Jain, T. X. Nghiem, M. Morari and R. Mangharam, "Learning and control using gaussian processes: towards bridging machine learning and controls for physical systems", Int. Conf. on Cyber-Physical Systems (ICCPS), 2018

[5] https://www.energy.gov/eere/buildings/commercial-reference-buildings

[6] R. L. Jana, S. Dey and P. Dasgupta, "A hierarchical HVAC control scheme for energy-aware smart building automation", ACM Trans. on Design Automat. of Electronic Systems, vol. 25(4), 2020

[7] V. Mnih, K. Kavukcuoglu, and D. Silver, "Human-level control through deep reinforcement learning", Nature 518, pp 529533, 2015

[8] M. M. Haghighi, "Modeling and optimal control algorithm design for HVAC systems in energy efficient buildings", Masters of Science Thesis, University of California Berkeley, 2010

[9] K. Uthaichana, R. DeCarlo, and S. Pekarek, "Hybrid optimal theory and predictive control for power management in hybrid electric vehicle", Journal of Nonlinear Systems and Applications, pp1-21, 2011

[10] H. Wu, X. Liu and M. Ding, "Dynamic economic dispatch of a microgrid: Mathematical models and solution algorithm", Elec. Power and Energy Sys. vol.63, pp 336-46, 2014

[11] D. P. Kingma and J. Ba. "Adam: A method for stochastic optimization" arXiv preprint arXiv:1412.6980 (2014).