Computation of IP3 using Single-Tone Moments Analysis

Dani Tannir and Roni Khazaka
Department of Electrical and Computer Engineering
McGill University
Montreal, Canada, H3A 2A7
dani.tannir@mail.mcgill.ca, roni.khazaka@mcgill.ca

Abstract

Intermodulation distortion is one of the key design requirements of Radio Frequency circuits. The standard approach for analyzing distortion using circuit simulators is to mimic measurement environments and compute the response due to a two-tone input. This considerably increases the CPU cost of the simulation because of the large number of variables resulting from the harmonics of these two tones and their intermodulation products. In this paper, we propose an analytical method for directly obtaining the intermodulation distortion from the Harmonic Balance equations with a only single-tone input, without the need to perform a Harmonic Balance simulation. The proposed method is shown to be significantly faster than traditional simulation based approaches.

1. Introduction

Technological advances and recent trends in consumer products have lead to a significant increase in the complexity of wireless communication circuits. At the same time, the commoditization of wireless components has considerably increased competition and made reducing the design cycle, and thus the time-to-market, an important competitive advantage. These factors have placed increasing demands on existing Computer Aided Design (CAD) tools, due to increases in circuit complexity and the requirement for faster simulations. Therefore new more efficient simulation and design automation algorithms are required. One of the main design specifications for Radio Frequency (RF) circuits is that of linearity, and one of the key figures of merit that RF circuit designers rely on for analyzing the linearity of the circuit is that of the third order intercept point (IP3) [6], which is the subject of this paper.

There are two main classes of techniques for computing the value of IP3 in a circuit. The first are methods that are analytical in nature, and are primarily based on Volterra Series techniques [8]. The Volterra kernels provide an efficient way to obtain the intermodulation distortion. However, such approaches require complex analytical manipulations of circuit expressions in order to derive the higher order Volterra kernels necessary for the computation of IP3. This makes such methods very difficult to automate for arbitrary circuits and nonlinearities. The second class of methods used for obtaining IP3 are simulation based approaches which rely on computation of the steady-state response of the circuit due to a multi-tone input, such as the Harmonic Balance (HB) method [3], [5]. The value of IP3 is then determined from the output spectrum. While such methods are fully automated, the computation of the steady state response requires a large CPU cost due to the presence of multi-tone inputs, thereby making them inefficient.

In this paper we propose a semi-analytical method for obtaining the IP3 of a circuit. The new method is analytical in the sense that it does not rely on performing a multi-tone simulation using a steady-state analysis technique (such as the Harmonic Balance method), but is rather based on computing the relevant Volterra kernels in the frequency domain. However, we use the term semi-analytical because these Volterra kernels are in fact computed numerically, and the computation is done directly from the original harmonic balance equations of the circuit. It is to be noted that while the HB equations are used in the proposed approach, their solution is not required. This approach also eliminates the need to perform complex analytical manipulations which are topology dependent and makes the method easily automated for arbitrary topologies. The computation complexity of obtaining these kernels is now reduced to solving a set of *linear* and *sparse* equations where the number of variables is due to only a single-tone input. This makes it very efficient compared to a traditional Harmonic Balance simulation which requires the solution of a set of nonlinear equations with a dense Jacobian matrix. Furthermore, the fact that only the single-tone equations are required (as opposed to the simulation based approaches which require multi-tone equations) significantly reduces the number of

978-3-9810801-5-5/DATE09 © 2009 EDAA

variables in the system and thus the CPU cost, while retaining the generality and accuracy of the method. As shown in the examples in Section 7, a very large CPU speedup can be achieved over traditional HB simulations.

This paper is organized into eight sections. Following the introduction, Section 2 outlines the Harmonic Balance formulation of a system and Section 3 outlines the single-tone formulation of IP3. An overview of the proposed method is then presented in Section 4 with the details of the derivation in Section 5. The method for computing the moments is described in Section 6. Two numerical examples are shown in Section 7 in order to illustrate the speedup and accuracy of the new method, followed by conclusions in Section 8.

2. Harmonic Balance formulation

One of the main advantages of the proposed method is that the computation of the Volterra Kernels is done directly from the Harmonic Balance equations of the circuit, and can thus be easily automated for arbitrary circuit topologies. In this section we will review the formulation of the Harmonic Balance method, which is one of the standard methods for calculating the steady-state solution of such a system. In this approach, the periodic solution is expressed as a truncated series of cosines and sines at the harmonics of the inputs as well as the intermodulation products given by

$$\boldsymbol{x}(t) = \boldsymbol{a}_0 + \sum_{k=1}^{H} (\boldsymbol{a}_k \cos(\omega_k t) + \boldsymbol{b}_k \sin(\omega_k t)) \qquad (1)$$

This transforms the Modified Nodal Analysis (MNA) [2] circuit equations into a set of nonlinear *algebraic* equations with the amplitudes of the sine and cosine coefficients as the unknowns. The HB equations can thus be expressed as [5],

$$\bar{\boldsymbol{G}}\boldsymbol{X} + \bar{\boldsymbol{C}}\boldsymbol{X} + \boldsymbol{F}(\boldsymbol{X}) = \boldsymbol{B}_{dc} + \alpha \boldsymbol{B}_{ac}, \qquad (2)$$

where $\boldsymbol{X} \in \Re^{N_h}$ is a vector of unknown cosine and sine coefficients for each of the variables in $\boldsymbol{x}(t)$. In this expression, $\bar{\boldsymbol{G}} \in \Re^{N_h \times N_h}$ is a block matrix representing the contribution of the linear memoryless elements, $\bar{\boldsymbol{C}} \in \Re^{N_h \times N_h}$ is a block matrix representing the contribution of the linear memory elements at the frequencies of operation, α is the amplitude of the input RF signal and $\boldsymbol{B}_{ac}$ is a vector showing the location of the input tone frequencies. $\boldsymbol{B}_{dc}$ is a vector containing the contributions of the DC independent sources. The size N_h of this system is typically very large due to the large number of harmonics and intermodulation products present in the case of multi tone inputs. Furthermore, the Jacobian of (2) is typically dense. This results in a large CPU cost in the computation of the system solution and the value of IP3.

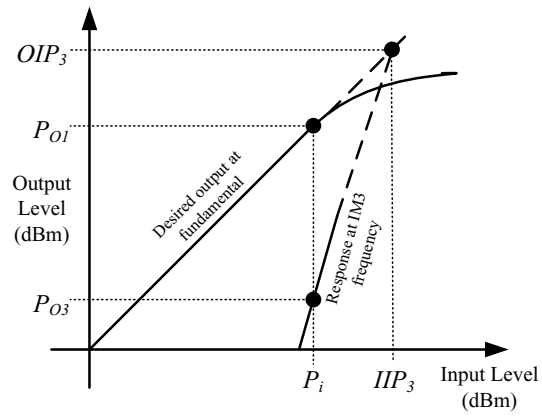

Figure 1. Definition of the input and output third order intercept points.

3. Single-tone formulation for IP3

In this section we define the third order intercept point, and derive a single tone expression for computing IP3 using Volterra kernels which will lay the foundation for our proposed algorithm described in the following sections. The third order intercept point (IP3) is a measure of the third order nonlinearity in a circuit. It is defined by taking note of the fact that for low input powers, the output of a circuit with two input tones (ω_1 and ω_2) behaves as follows: The fundamental tones (ω_1, ω_2) increase linearly with the input with a slope of 1 on a dB scale, while the third order intermodulation (IM3) products ($2\omega_1 - \omega_2$, $2\omega_2 - \omega_1$) increase linearly with the input with a slope of 3 on a dB scale. IP3 is defined as the intersection of these two lines as shown in Fig. 1. The output referred IP3 (OIP3) is simply the input referred IP3 (IIP3) adjusted by the gain of the system. Mathematically, the input referred IP3 can be expressed as [7]

$$IIP3 = P_i + \frac{1}{2}[P_{o1} - P_{o3}] \qquad (3)$$

where P_i is the input power, P_{o1} is the output power at the fundamental frequency (ω_1 or ω_2), and P_{o3} is the output power at the IM3 frequency ($2\omega_1 - \omega_2$ or $2\omega_2 - \omega_1$). Note that this definition inherently assumes that the fundamental frequencies are in the pass band, and are sufficiently close to each other so that the output powers at the two fundamental frequencies are the same, and the output powers at the two intermodulation frequencies are the same. The standard simulation based approach for obtaining IP3, is to perform a multi-tone simulation using a steady state analysis method such as the Harmonic Balance technique and then compute IP3 from the HB solution using (3).

The value of IP3 can also be expressed analytically in terms of the Volterra kernels. Note that it is possible to de-

fine IP3 both in terms of the upper side tones and the lower side tones as follows [8],

$$IIP_3 = \sqrt{\frac{4|H_1(j\omega_1)|}{3|H_3(j\omega_1, j\omega_1, -j\omega_2)|}} \tag{4}$$

$$IIP_3 = \sqrt{\frac{4|H_1(j\omega_2)|}{3|H_3(j\omega_2, j\omega_2, -j\omega_1)|}} \tag{5}$$

Both definitions of IP3 in (4) and (5) are equally valid, and since the two fundamental tones are typically chosen in the passband and close enough to each other on the frequency spectrum such that

$$H_1(j\omega_1) \approx H_1(j\omega_2) \tag{6}$$

$$H_3(j\omega_1, j\omega_1, -j\omega_2) \approx H_3(j\omega_2, j\omega_2, -j\omega_1) \tag{7}$$

the value of IP3 found using either (4) or (5) would be approximately the same. However, if the two input fundamental frequencies are chosen sufficiently far away from each other such that (6) and (7) are no longer valid, the standard definition of IP3 is no longer valid.

Note that the presence of two input tones in the above formulations is simply to be consistent with measurement and simulation based approaches where two input tones are necessary in order to obtain the intermodulation product. When the values of the Volterra kernels can be analytically obtained for a given frequency, the approximations in (6) and (7) are no longer necessary, and the intercept point IP3 can now be defined using only a single tone (ω_1) as

$$IIP_3 = \sqrt{\frac{4|H_1(j\omega_1)|}{3|H_3(j\omega_1, j\omega_1, -j\omega_1)|}} \tag{8}$$

It is also important to note that the formulation in (8) gives almost identical results as (4) because for $\omega_1 \approx \omega_2$,

$$|H_3(j\omega_1, j\omega_1, -j\omega_2)| \approx |H_3(j\omega_1, j\omega_1, -j\omega_1)| \tag{9}$$

and any small variations are simply a matter of definition.

4. Overview of the proposed method

In this paper, we propose a semi-analytical approach to evaluate the expression in (8), thus eliminating the need to consider 2 input tones. The general steps of the proposed approach are as follows. First, the single-tone moments of the Harmonic Balance (HB) equations are computed, then the values of the appropriate terms in equation (8) are extracted from the moments and used to compute IP3. Note that the HB simulation is not performed in this proposed approach, in fact the computation of the moments requires the solution of a sparse set of linear algebraic equations and is thus much cheaper than finding the solution of the nonlinear HB equations which have a dense Jacobian. Furthermore, since only one tone is required to obtain the results, the number of variables in the equations is considerably reduced (as will be illustrated in the numerical examples in Section 7). This translates into a significant saving in CPU cost. Finally, since this method is based on the HB equations, it is general for any circuit topology and is easily automated. A summary of the main steps of the proposed method's algorithm is shown in Fig. 2. The details of the method are presented in the next sections. In Section 5 the moments of the Harmonic Balance equations are defined and a relationship is derived in order to obtain the required Volterra kernels from these moments.

1. Set up the single tone Harmonic Balance equations according to the formulation shown in (2).
2. Calculate the moment vectors ($\boldsymbol{A_n}; n \geq 0$) defined by (10) using only a single-tone simulation.
3. Obtain the single-tone Volterra kernels numerically from the entries in the moment vectors at the fundamental frequency locations of the first and third moment vectors according to (22).
4. Determine the distortion by calculating the third order intercept point according to (8).

Figure 2. Summary of the proposed algorithm.

5. Moments based computation of IP3

Consider a circuit whose Harmonic Balance equations are given in (2). The Taylor Series expansion of the output solution vector $\boldsymbol{X}$ with respect to the input RF power α is,

$$\begin{aligned} \boldsymbol{X} &= \boldsymbol{A}_0 + \boldsymbol{A}_1\alpha + \boldsymbol{A}_2\alpha^2 + \boldsymbol{A}_3\alpha^3 + \dots \\ &= \sum_{k=0}^{q} \boldsymbol{A}_k\alpha^k \end{aligned} \tag{10}$$

where $\boldsymbol{A}_k$ is the kth moment vector. As outlined in the previous section, the first step of the proposed algorithm is the computation of the moments $\boldsymbol{A}_k$ efficiently (the details of this step are outlined in Section 6). The next step of the algorithm is to extract the terms required to compute equation (8) from the moments. In this section, we focus our attention on this second step and derive the relation between the single-tone moments and the terms in (8). This is first done for memoryless circuits for illustrative purposes, and then generalized for circuits with memory.

5.1. Memoryless case

To simplify the presentation, we first consider a memoryless system. The output variable y is expressed as a power series of the input v. The input output relationship can be written as,

$$y = k_0 + k_1 v + k_2 v^2 + k_3 v^3 + \cdots = \sum_n k_n v^n \quad (11)$$

In a single tone test, the input signal is defined as $v = \alpha\cos(\omega t)$, with ω being the input RF frequency. Substituting this expression into (11), truncating after k_3, and expanding using trigonometric identities we obtain

$$\begin{aligned} y &= k_0 + [k_1\cos(\omega t)]\alpha + [\frac{k_2}{2} + \frac{k_2}{2}\cos(2\omega t)]\alpha^2 + \\ &\quad [\frac{k_3}{4}\cos(\omega t) + \frac{3k_3}{4}\cos(3\omega t)]\alpha^3 \end{aligned} \quad (12)$$

By comparing (12) with (10), the location of the k_n terms in the system moment vectors $\boldsymbol{A}_k$ can be determined. The relation given by (13) shows the contents of the first four moment vectors at the three harmonic frequencies.

$$\underbrace{\begin{vmatrix} \text{DC} \\ \omega \\ 2\omega \\ 3\omega \\ \vdots \end{vmatrix}}_{\text{Frequency}} \begin{matrix} \rightarrow \\ \rightarrow \\ \rightarrow \\ \rightarrow \\ \vdots \end{matrix} \underbrace{\begin{bmatrix} k_0 \\ 0 \\ 0 \\ 0 \\ \vdots \end{bmatrix}}_{\boldsymbol{A}_0} \underbrace{\begin{bmatrix} 0 \\ \mathbf{k_1} \\ 0 \\ 0 \\ \vdots \end{bmatrix}}_{\boldsymbol{A}_1} \underbrace{\begin{bmatrix} \frac{1}{2}k_2 \\ 0 \\ \frac{1}{2}k_2 \\ 0 \\ \vdots \end{bmatrix}}_{\boldsymbol{A}_2} \underbrace{\begin{bmatrix} 0 \\ \mathbf{\frac{3}{4}k_3} \\ 0 \\ \frac{1}{4}k_3 \\ \vdots \end{bmatrix}}_{\boldsymbol{A}_3} \quad (13)$$

5.2. Circuits with memory elements

In the case of systems with memory (i.e. containing energy storage elements such as capacitors and inductors), a fundamentally similar analysis can be performed. The additional complexity here comes from the fact that the output is now represented as a Volterra series rather than a power series. In this case a relation between the system moments and the Volterra kernels, which is similar to equation (13), can be derived. In order to derive these relationships we first consider the system representation in terms of the Volterra series,

$$y(t) = H_1(v(t)) + H_2(v(t)) + \cdots + H_n(v(t)) \quad (14)$$

where $y(t)$ is the output of the system $H(t)$, with $v(t)$ being the input. $H_i(t)$ is the ith Volterra operator and is of the ith order [8]. To determine the location of the kernels in the moment vectors we substitute the expression for an input function with a single tone of amplitude α, similar to the case of memoryless systems, which is given by

$$\begin{aligned} v(t) &= \alpha\cos(\omega t) && (15) \\ &= \frac{\alpha}{2}e^{j\omega t} + \frac{\alpha}{2}e^{-j\omega t} && (16) \\ &= v_a(t) + v_b(t) && (17) \end{aligned}$$

into (14). Truncating the resulting equations after $n = 3$ we obtain the following expressions for each Volterra operator [8]

$$\begin{aligned} H_1(v(t)) &= H_1(v_a) + H_1(v_b) && (18) \\ H_2(v(t)) &= H_2(v_a) + H_2(v_b) + 2H_2(v_a, v_b) && (19) \\ H_3(v(t)) &= H_3(v_a) + H_3(v_b) + 6H_3(v_a, v_b, v_b) && (20) \end{aligned}$$

Upon evaluation of all the terms in (18), (19) and (20), we can then substitute the resulting expressions into (14). Finally, we rearrange the resulting expression by grouping like powers of α to obtain the following input output relation

$$\begin{aligned} y &= H_0 + [Re(H_1(j\omega)e^{j\omega t})]\alpha + \\ &\quad [\frac{1}{2}Re(H_2(j\omega, -j\omega)) + \frac{1}{2}Re(H_2(j\omega, j\omega)e^{j2\omega t})]\alpha^2 \\ &\quad +[\frac{3}{4}Re(H_3(j\omega, j\omega, -j\omega)e^{j\omega t}) + \\ &\quad \frac{1}{4}Re(H_3(j\omega, j\omega, j\omega)e^{j3\omega t})]\alpha^3 \end{aligned} \quad (21)$$

The Volterra Series expression in (21) is similar to the expression shown in (12) which proves that the proposed method is essentially the numerical computation of the Volterra kernels evaluated at a single frequency. In a similar fashion to memoryless systems, the location of the parameters to compute the value of the third order intercept point are the entries in bold found in the moment vectors, given by

$$\underbrace{\begin{vmatrix} \text{DC} \\ \omega \\ 2\omega \\ 3\omega \\ \vdots \end{vmatrix}}_{\text{Frequency}} \begin{matrix} \rightarrow \\ \rightarrow \\ \rightarrow \\ \rightarrow \\ \rightarrow \end{matrix} \underbrace{\begin{bmatrix} 0 \\ |\mathbf{H_1}(\mathbf{j}\omega)| \\ 0 \\ 0 \\ \vdots \end{bmatrix}}_{\boldsymbol{A}_1} \underbrace{\begin{bmatrix} 0 \\ \mathbf{\frac{3}{4}}|\mathbf{H_3}(\mathbf{j}\omega, \mathbf{j}\omega, -\mathbf{j}\omega)| \\ 0 \\ \frac{1}{4}|H_3(j\omega, j\omega, j\omega)| \\ \vdots \end{bmatrix}}_{\boldsymbol{A}_3} \quad (22)$$

For the case of memoryless systems, the expressions for these kernels simplify to the terms k_1 and k_3 in (13).

6. Computation of the moments

In this paper we use the algorithm proposed in [1] in order to compute the moments of the Harmonic balance equations as defined in (10). In this section, we present a brief overview of the algorithm of [1] in order to show the computational efficiency of obtaining the moments as compared to a traditional multi-tone Harmonic Balance simulation. Note that in this paper, only the moments due to a single tone input are required, while a simulation based computation of IP3 requires a multi-tone Harmonic Balance simulation.

The moments of a system are defined as the coefficients of the Taylor series expansion of the solution vector $\boldsymbol{X}$ of the system described by (2) with respect to the input RF power α. If the solution is expressed using (10), then $\boldsymbol{A}_k$ are the k moment vectors. The zeroth moment vector $\boldsymbol{A}_0$, is obtained by simply finding the DC solution of the system described by (2). The first moment vector $\boldsymbol{A}_1$, is then found by solving the system of equations given by

$$\boldsymbol{\Phi}\boldsymbol{A}_1 = \boldsymbol{B}_{ac} \tag{23}$$

where,

$$\boldsymbol{\Phi} = \bar{\boldsymbol{G}} + \bar{\boldsymbol{C}} + \left.\frac{\partial \boldsymbol{F}(\boldsymbol{X})}{\partial \boldsymbol{X}}\right|_{(\alpha=0)} \tag{24}$$

In this relation, the first moment vector can be obtained using one LU Decomposition to solve (23). It is important to note that the matrix $\boldsymbol{\Phi}$ has the same structure as a Jacobian matrix but is evaluated only at DC which makes it very sparse. As for the remaining moment vectors $\boldsymbol{A}_n$, these are found by solving the following recursive relation

$$\boldsymbol{\Phi}\boldsymbol{A}_n = -\frac{1}{n}\sum_{j=1}^{n-1}(n-j)\boldsymbol{T}_j\boldsymbol{A}_{n-j} \tag{25}$$

The right-hand side of equation (25) is calculated using the values of the previous moments ($\boldsymbol{A}_{n-j}$) that have already been obtained, in addition to the values of the partial derivatives of the non-linear vector functions with respect to the solution vector ($\boldsymbol{T}_j$). As can be seen from (2), (23) and (25), the computation of the moment vectors is a solution of a set of linear algebraic equations where the left-hand-side matrix is the same throughout and is therefore very efficient. Furthermore, this left-hand-side matrix is essentially the single tone Harmonic Balance jacobian evaluated at DC, which is a very sparse matrix compared to a typical Harmonic Balance jacobian.

7. Numerical examples

In this section we compute the value of IP3 using the proposed approach and compare it to that obtained using traditional approaches to demonstrate the accuracy and speedup of the method on two example amplifier circuits.

7.1. Example 1

The first example considered is the Two Stage Low Noise Amplifier circuit shown in Fig. 3 [4]. This circuit is matched to 50Ω source and load impedances at a frequency of 500 MHz. The input and output matching networks in addition to the biasing circuitry and DC blocking capacitors are also shown in Fig. 3. The input RF voltage signal has an amplitude of 1mV (input RF power of -47dBm when matched to a 50Ω source impedance). In order to measure the IP3 of the circuit, the brute force simulation approach was first used by applying two -47 dBm tones at the RF input, with f_1 = 500 MHz and f_2 = 501 MHz, and performing a standard Harmonic Balance analysis. The calculated IIP3 in this case was -9.76 dBm.

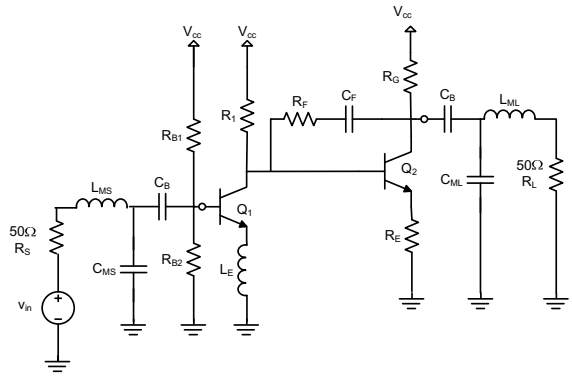

Figure 3. Two-stage low noise amplifier circuit diagram.

Table 1. Comparison of CPU cost between the proposed method and the Harmonic Balance solution for circuit of example 1.

	Harmonic Balance	Proposed Method	**Overall Speedup**
CPU time	30.73 s	0.14 s	**219**
Jacobian Size	2825 x 2825	375 x 375	
IIP3 [dBm]	-9.76	-9.56	

The distortion was then analyzed using the proposed approach by computing the moments of the system using only a single-tone test at $f = 500$ MHz. The Volterra kernels at the output fundamental frequency in the first and third moment vectors were then extracted, and the value of IIP3 was computed. In this case the resulting value of IIP3 was found to be -9.56 dBm, therefore showing a discrepancy of around 0.20 dBm with the original two-tone test. It is important to note that this discrepancy occurs due to the difference in the definition of IP3, rather than numerical error. A comparison of the CPU times between the proposed method and the HB solution using a prototype Matlab simulator and seven harmonics is shown in Table 1. As can be seen, the proposed method presents a speed-up of 219 times over the Harmonic Balance solution.

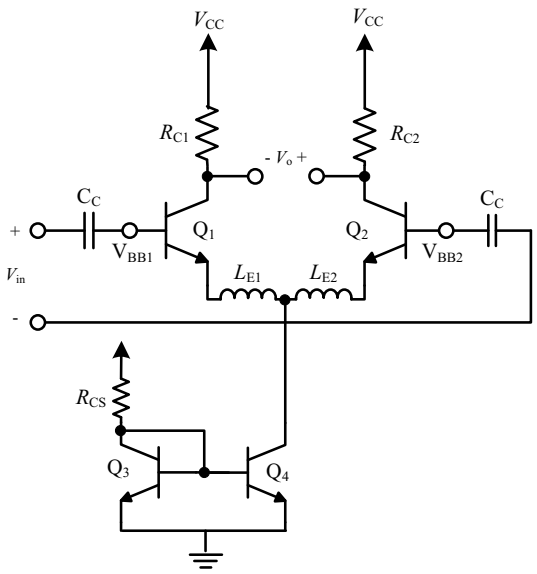

Figure 4. Differential amplifier with emitter degeneration circuit diagram.

7.2. Example 2

The second example considered is a BJT differential amplifier circuit with emitter degeneration inductors as shown in Fig. 4. A current mirror topology is used to implement the DC bias current source. The input and output matching networks in addition to the DC voltage biasing circuitry to set V_{BB1} and V_{BB2}, are not shown in Fig. 4. The input RF voltage signal has an amplitude of 0.1mV (a power of -67dBm matched to 50Ω source impedance). Once again, the linearity of the circuit was measured first using the Harmonic Balance method by applying two -67 dBm tones at the RF input, with f_1 = 1.000 GHz and f_2 = 1.001 GHz, and performing a standard Harmonic Balance analysis. The value of IIP3 in this case was found to be -7.24 dBm.

The value of IIP3 was then obtained using the proposed approach by computing the moments of the system using only a single-tone test at $f = 1$ GHz. After computing the moments, the Volterra kernels at the output fundamental frequency in the first and third moment vectors were extracted, and the value of IIP3 was computed. In this case the resulting value of IIP3 was found to be -7.20 dBm, therefore showing a discrepancy of around 0.04 dBm with the original two-tone test. A comparison of the CPU times between the proposed method and the HB solution using a prototype Matlab simulator and seven harmonics is shown in Table 2. As can be seen, the proposed method presents a speed-up of 415 times over the traditional Harmonic Balance solution. It is important to note that the speedup becomes more significant using a single-tone analysis, as the number of nonlinear elements present in the system increases.

Table 2. Comparison of CPU cost between the proposed method and the Harmonic Balance solution for circuit of example 2.

	Harmonic Balance	Proposed Method	**Overall Speedup**
CPU time	64.81 s	0.16 s	**415**
Jacobian Size	3277 x 3277	435 x 435	
IIP3 [dBm]	-7.24	-7.20	

8. Conclusion

In this paper, a new simulation method for measuring distortion at the output of a non-linear circuit based on the calculation of the system moments with respect to a single-tone input was presented. The new approach is applicable to arbitrary circuit topologies and was shown to be accurate when compared to two-tone Harmonic Balance simulations. This method presents significant reduction in the size of the system over two-tone methods, therefore providing significant CPU speed-up.

References

[1] E. Gad, R. Khazaka, M. Nakhla, and R. Griffith. A circuit reduction technique for finding the steady-state solution of nonlinear circuits. *IEEE Trans. Microwave Theory Tech.*, 48(12):2389–2396, Dec. 2000.

[2] C. W. Ho, A. E. Ruehli, and P. A. Brennan. The modified nodal approach to network analysis. *IEEE Trans. Circuits Syst.*, 22(6):504–509, June 1975.

[3] K. S. Kundert, J. K. White, and A. Sangiovanni-Vincentelli. *Steady-State Methods for Simulating Analog and Microwave Circuits*. Kluwer Academic, Boston, 1990.

[4] R. G. Meyer and W. D. Mack. A 1-GHz BiCMOS RF front-end IC. *IEEE Journal of Solid State Circuits*, 29(3), Mar. 1994.

[5] M. S. Nakhla and J. Vlach. A piecewise harmonic-balance technique for determination of periodic response of nonlinear systems. *IEEE Trans. Circuits Syst.*, 23(2):85–91, Feb. 1976.

[6] B. Razavi. *RF Microelectronics*. Prentice-Hall, New Jersey, 1998.

[7] J. Rogers and C. Plett. *Radio Frequency Integrated Circuit Design*. Artech House, Inc., Norwood, MA, 2003.

[8] P. Wambacq and W. Sansen. *Distortion Analysis of Analog Integrated Circuits*. Kluwer Academic Publishers, The Netherlands, 1998.